2 Hour Fire Rated Filing Cabinets

Multifile Fire Rated Filing Cabinets

Multifile offer a range of 1 and 2 Hour Fire Rated Filing Cabinets, and are available in 2, 3 or 4 Drawer versions with Key and/or Digital Locks. Our cabinets have been designed and tested to provide the highest levels of protection for documents in the event of Fire.

2 hour

Ideal for storage of:

Last Will and Testaments, Title Deeds, Passports and other important paper documents.

sales@multifile.com.au | www.multifile.com.au | toll 1800 080 280

FIRE RESISTANT CABINETS
A Division of Multifile WSA

GDF 2 Hour Fire Rated

The GDF Range of Fire Rated Filing Cabinets is a premium certified 2 hour fire resistant filing cabinet. Featuring a digitally operated top locking drawer and individually keyed drawers the layout allows the operator to configure the drawer locking configuration as required.

2 hour

Fire Rating	120 Minute Fire Rated Fire resistant filing cabinet for document. Certified for fire protection of documents. NT FIRE 017 - 120 Paper
Locks	Dual Digital Lock and Individually Key Lockable Drawers
Sizing	Available in 2, 3 or 4 drawer

Model GDF2002 – 2 Drawer Filing Cabinet

NT FIRE 017 - 120 Paper – Fire Rating
Digital lock and Key Pad
All Drawers have Individual Key Locks
Standard with 2 keys per Drawer
Durable quality paint finish
Optional DATA Insert for any drawer
Asbestos Free

GDF 2 Hour Fire Rated

Model GDF3002 – 3 Drawer Filing Cabinet

NT FIRE 017 - 120 Paper – Fire Rating
Digital lock and Key Pad
All Drawers have Individual Key Locks
Standard with 2 keys per Drawer
Durable quality paint finish
Optional DATA Insert for any drawer
Asbestos Free

Dimensions:
Height 1106 mm
Width 570 mm
Depth 700 mm
250KG

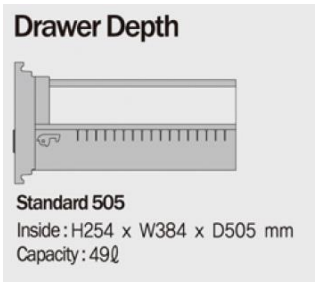

Model GDF4002 – 4 Drawer Filing Cabinet

NT FIRE 017 - 120 Paper – Fire Rating
Digital lock and Key Pad
All Drawers have Individual Key Locks
Standard with 2 keys per Drawer
Durable quality paint finish
Optional DATA Insert for any drawer
Asbestos Free

Dimensions:
Height 1448 mm
Width 570 mm
Depth 700 mm
320KG

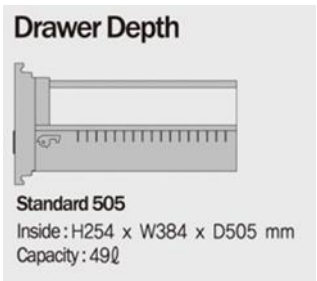

GDF 2 Hour Fire Rated

NT FIRE 017 Fire Test
Independently tested to the most stringent international standards, The NT Fire 017 fire test originates from NordTest the Swedish National Testing and Research Institute. This test is considered an industry standard. The SP testing lab in Sweden is perhaps the most highly regarded lab which performs this test.

NT FIRE 017-120 Paper: The safe is heated in a furnace for 2 hour to 1049° C. During this time, the internal temperature of the safe may not rise by more than 150° C. Safes in this category provide one hour of protection for paper by keeping temperatures below 177° C, the point at which paper chars or combusts.

❶ Before heating

❷ Heating

❸ After heating

❹ Interior of tested drawer

Description

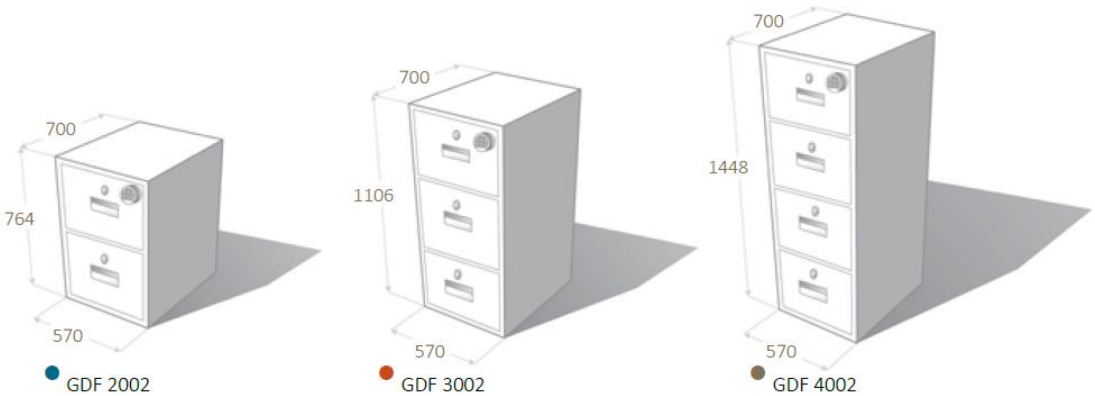

Model	EXTERNAL (MM)			INTERNAL DRAWER SIZE (MM)			Weight (kg)	Volume per drawer (litres)	Fire Rating (mins)
	Height	Width	Depth	Height	Width	Depth			
GDF 2002	764	570	700	254	384	505	180	49	120
GDF 3002	1106	570	700	254	384	505	250	49	120
GDF 4002	1448	570	700	254	384	505	320	49	120
Data Insert	265	380	500	162	282	402	8	19	120

DEPTH MEASUREMENT DOES NOT INCLUDE THE HANDLE, KEYPAD OR HINGES. PLEASE ALLOW 50MM. Due to Guardall constantly striving to deliver better products; sizes and colours may vary slightly.